JCDRILL

Reliable Service

JCDRILL provides customers with free installation guidance, on-site technical training, startup, and commissioning services.

Efficient Service

JCDRILL has established a fast information communication channel between the after-sales service team, technical department, parts department, and warehouse, ensuring customer issues are resolved promptly.

Continuous Service

Even the best equipment requires regular maintenance to ensure the drill's performance. JCDRILL offers comprehensive service solutions to maintain productivity while maximizing benefits, improving availability, and reducing operating costs.

JCDRILL

Beijing Jincheng Mining Technology Co., Ltd.

Telephone: +86 10 5368 1788

Mobile: +8613811398425

Email: info@jcdrill.com

Website: WWW.JCDRILL.COM

Address: Rm1604, Mansion 2, No.A13 Beiyuan Road, Chaoyang District, Beijing, China

JRC500B RC / DTH DRILLING

JRC500B REVERSE CIRCULATION (RC) DRILLING RIG

JRC500B

The JRC500B is a crawler-mounted, fully hydraulic reverse circulation (RC) drilling rig designed for deep-hole exploration and sample drilling applications. It is suitable for a wide range of geological conditions and supports hole diameters from 105mm to 450mm, with a maximum drilling depth of 500m. The rig is compatible with 102mm, 114mm, and 127mm RC drill pipes, using a 6000mm drill pipe length configuration.

Powered by a 239kW Cummins diesel engine, the rig adopts a fully hydraulic system for rotation, feed, lifting, clamping, winch, stabilizing, and tramming functions. The rotary head delivers 11800-5900N.m of torque at 0-74-148rpm, while the feed system provides a 7600mm stroke, 30t pullback capacity, and 15t push-down capacity for stable deep-hole drilling performance.

The rig is equipped with a three-layer cyclone and sampler for efficient sample collection, as well as an automatic rod handling system to improve drilling efficiency and reduce manual operation. Combined with remote control and valve control, a hydraulic cooling system, and a heavy-duty crawler chassis, the JRC500B provides reliable performance for demanding reverse circulation drilling operations.

Main Components

Structure & Key Components

01 Operator Control Station

The rig combines remote control and valve control for flexible operation under different working conditions. This control layout improves operating convenience, visibility, and overall jobsite safety.

02 Rotary Head Assembly

The power head integrates the rotary head and air box into one compact assembly, reducing leakage and improving structural rigidity.

03 Automatic Rod Handling System

The automatic rod handling system supports efficient rod changing, reduces labor intensity, and improves operating safety and drilling productivity.

04 Feed Drive System

The feed system adopts a cylinder and chain structure, providing stable feed and lifting performance for deep-hole drilling. Its long feed stroke and high pullback capacity ensure efficient rod handling and drilling continuity.

05 Reinforced Undercarriage & Main Frame

High-strength steel chassis with stiffened crawler frame for superior torsional rigidity. Balanced weight distribution ensures stability across varied terrain under heavy drilling loads.

06 Heavy-Duty Mast Assembly

The mast is designed for heavy-duty drilling applications, offering stable structural support and reliable angle adjustment. The compensation stroke improves drilling adaptability in different working positions and ground conditions.

07 Cyclone Assembly

Three-stage RC cyclone and sample splitter with pneumatic stage separation. Positioned at the rear side of the operator station for easy sample monitoring, with hydraulic swing action for operating and transport positions.

Efficient Drilling, Simplified Operation

The JRC500B is a fully hydraulic RC and DTH drilling rig featuring an automatic rod handling system, three-stage cyclone and sampler, and remote and valve control system. Designed for efficient operation and reliable sample collection, it delivers stable performance in demanding drilling conditions.

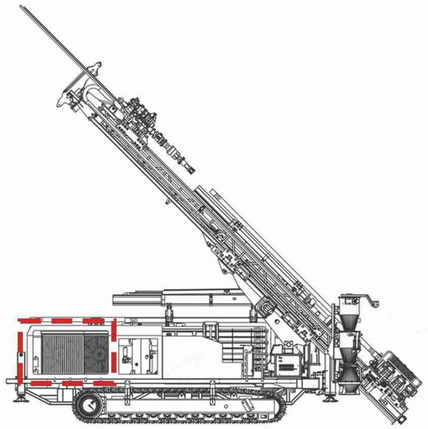

(Optional) Air Compressor on board

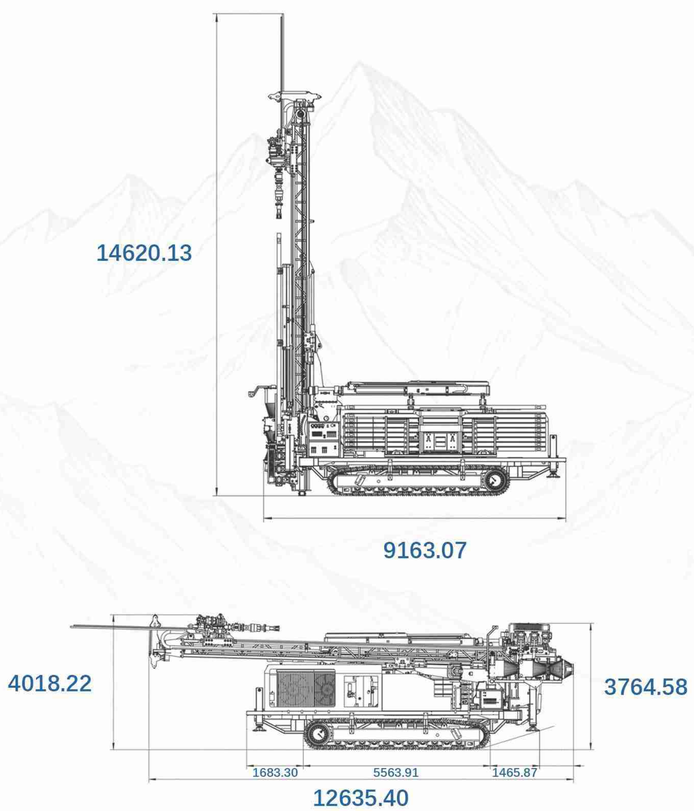

Technical specifications

Specification	Unit	JRC500B
Geology drilled		All kinds
Drilling Type		
Drill system and operation		Hydraulic
Max.Hole Diameter	mm	105-450
Max.Hole Depth	m	500
RC Drill pipe diameter	mm	102/114/127
Drill pipe length	mm	6000
Rotation Unit		
Rotation Torque(Eaton Motor)	N.M	11800--5900
Rotation Speed	rpm	0--74--148
Mast		
Compensation distance	mm	1500
Drilling Angle range	°	45-90
Mast total Length	mm	11000
Feeding System		
Feeding Structure		Cylinder&Chain
Max. Feed Speed	M/min	0-32
Max. Lifting Speed	M/min	22
Feed Stroke	mm	7600
Pull back Capacity	T	30
Push down Capacity	T	0-15
Winch		
Lifting force of tool winch	T	1.5
Rope Diamter	mm	Φ10
Swing angle		Cylinder ±40°
Auxiliary winch	T	0.5
Rope Diamter		6mm
Slips and breakout		
Slipstable max.Opeaning	mm	240
Cooling system		
Engine system		Engine fan with radiator
Hydraulic System		Hydraulic Driven Cooler
Pipe Rack		
Capacity(102x6m RC Drill pipe)		36Pcs(216m)
Power Unit		
Diesel Engine Model		CUMMINS(Euro-2)
Rated Horse power	Kw	239KW
Electrical System	Volt	24
Fuel Tank Capacity		200L

Specification	Unit	JRC500B
Hydraulic System		Open quantitative system
Pump Model		L8V-107-107
Pump type		Quantitative Piston pump
Sample Coolect System		
Blow down valve		Standard Install
Cyclone type		Three layer cyclone& sampler
Hammer Oil tank		
Tank Capacity	L	16
Control		Needle Valve Regulate
Hydraulic Jacks		
Max.Extension x2 front Jacks	°	90
Max.Extensionx2 Rear Jacks		N/A
Stroke of x2 front Jacks	mm	600
Stroke of x2 rear Jacks	mm	600
Control System		
Control type		Remote control & valve control
Hydraulic Clamp		3 layers
Safety alert System		
Sample hose connection		With steel protection net
Emergency Stop button		1 front,1back
Fire extinguisher		2Pcs
Gradeability	°	22°
Walking Speed	Km/h	1.5--2.5
Tramming motor capacity		TL60
Footboard		Standard 2pcs
Seat		Standard
Reverse remind		Standard
Lifting point		Standard
Rod change camera		Standard
Dimension		
Net Weight	Ton	34
Shipping Dimension	mm	12000×2900×3000
Ground Clearance	mm	320
REMOTE CONTROL		
Main pump: constant power load sensitive variable piston pump (P=32.5Mpa)		
Power mechanism: engine-coupling-main oil pump		
Main valve: electro-hydraulic pilot load sensitive directional valve - electric control valve, remote control		
Main rotation motor: plunger high-pressure variable hydraulic motor (P=32.5Mpa)		
Electronic control system: imported controller, remote control, Taiwan analog handle, proximity switch, etc		

RC Drilling Rigs

JRC500

Crawler Reverse Circulation Drilling Rig

- Fully hydraulic drilling system for stable rotation, feed, and lifting control
- Designed for deep-hole reverse circulation mineral exploration
- Crawler-mounted structure suitable for uneven and off-road terrain
- Compatible with external high-pressure air compressor systems

JRC500X

Crawler RC(Reverse Circulation) Drilling Rig

- Fully hydraulic drilling system for stable rotation, feed, and lifting control
- Designed for deep-hole reverse circulation mineral exploration
- Upgraded winch boom with rotation and telescopic movement for flexible handling
- Movable operator station for better visibility and operating convenience

JRC500T

Truck-Mounted Reverse Circulation Drilling Rig

- Truck-mounted configuration for improved mobility between drilling sites
- Fully hydraulic RC drilling system integrated with vehicle chassis
- Reduced setup and relocation time compared to crawler models
- Suitable for road-accessible geological exploration projects

JRC500BA

Integrated RC Drilling Rig

- Automatic rod loading and unloading system
- Integrated onboard air compressor
- Compact and self-contained drilling configuration
- Reduced auxiliary equipment requirement on site

RC Drilling Products

Air Compressor

Gear Box

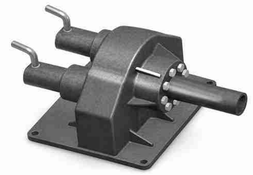

Hammer& RC Bits

Digout Sub& Safety Sub

Air Swivel

RC Chip Trays

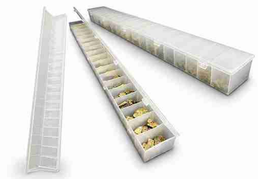

Air Hose& Discharge Tube

Drill Rod

Sample Splitter

Cyclone

CATEGORY	JRC500B	JRC500
Sample Collection System	■ Three-layer cyclone and sampler ■ Improved sample discharge and collection efficiency ■ Better support for continuous geological sampling	■ Standard sample collection configuration ■ Conventional sample discharge layout ■ Standard RC sample collection system
Rod Handling System	■ Automatic rod handling system ■ Reduced manual rod changing ■ Improved drilling efficiency and site safety	■ Conventional rod handling configuration ■ Higher manual operation requirement ■ Standard handling efficiency
Control System Layout	■ Remote control and valve control ■ More flexible operation under different working conditions ■ Improved operating convenience and safety	■ Standard hydraulic control layout ■ Conventional operating mode ■ Standard control arrangement
Hydraulic Clamp System	■ Three-layer hydraulic clamp ■ More reliable pipe holding performance	■ Conventional clamp configuration ■ Standard pipe clamping capability
Drilling Automation	■ Higher automation level ■ Reduced labor intensity	■ Conventional operation process ■ More manual intervention required
Overall Working Efficiency	■ Faster rod handling and improved sampling workflow ■ Better suited for demanding RC drilling operations	■ Standard drilling workflow ■ Basic configuration for conventional drilling applications

ITEM	JRC500B	JRC500
Max. Depth	RC:500m	RC:500m
Max. Hole Dia.	105-450mm	105-450mm
Rotation Torque	11800-5900N.m	14000N.m
Rotation Speed	0-74-148rpm	—
Feed Stroke	7600mm	—
Pull Back	30t	34t
Engine Power	239kW	132kW
Net Weight	34t	12t
Control Type	Remote control + valve control	Standard control
Cyclone Type	Three-layer cyclone & sampler	Standard configuration

Service

Project-Based Solutions

Equipment configurations are recommended according to project requirements, drilling method, and working conditions to ensure suitability for the intended application.

Warranty Term

The warranty period is one (1) yearfrom the date of delivery. Weguarantee that all products supplied willmeet the agreed specifications, qualitystandards, and applicable requirementsat the time of delivery.

Our products are manufactured andinspected under strict quality controlprocedures to ensure consistentperformance and reliability throughoutthe production and delivery process.

24 Hours Effective Service

With professional machine support and experienced export for many years,well known any countries favourable policy

Field Support

Engineers can be dispatched to the project site when required. Support includes commissioning, operational guidance, and basic maintenance instruction.

Reverse Circulation Drilling Projects

JRC200
Worked in the Middle East.

JRC300B
Worked in africa

JRC200
Worked in africa
(high-temperature environment)

BEIJING JINCHENG MINING TECHNOLOGY CO., LTD.

+86 10 5368 1788
INFO@JCDRILL.COM
+8613811398425
WWW.JCDRILL.COM

RM1604, MANSION 2, NO.A13 BEIYUAN ROAD,
CHAOYANG DISTRICT, BEIJING, CHINA

SURVIVAL BY QUALITY,
DEVELOPMENT BY CREDIT!